1. Design and Features Proportional Solenoids

The conventional solenoid is a digital device, meaning the plunger is either in the energized or de-energized position. Proportional solenoids, however, are an analog device allowing for incremental positioning. This feature is made possible by a unique design of the magnetic pole configurations and the addition of a return spring supplied in your application. Thus the position of the armature is controlled by varying the input current to the coil. The more current that is applied to the coil, the further the armature moves in its stroke (toward the pole piece). Our proportional solenoids provide stable output force characteristics with low hysteresis and a fast response time for a wide variety of applications, especially for hydraulic applications. (Fig. 1)

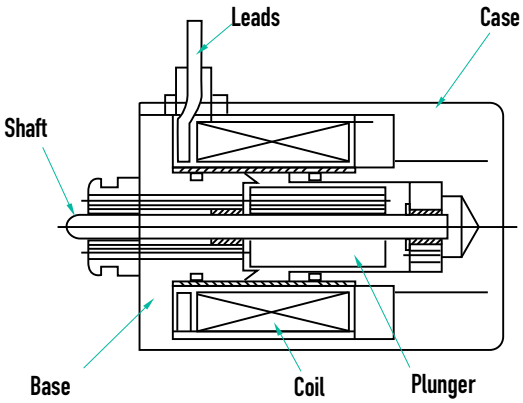

Fig. 1

A) Relationship Between Stroke and Force

A proportional solenoid has two ranges of stroke: The control stroke where the plunger position is dependent on the applied current, and the approach stroke where force is dependent on stroke position. The stroke is specified on each size of the solenoid and most applications use only the control stroke. Fig. 2 shows the characteristics of stroke and force. The spring characteristic is the spring load that has been installed outside the solenoid. Positions S1, S2 and 0 are where the force curves of each current: i1, i2 and i3 intersect the spring characteristics. At these intersections the forces are balanced (the solenoid's output force is equal to the spring load). This means that with a coil current of i2, a balancing force by the spring against the plunger is equalized with the resulting position of S2. When varying the coil current to i2, the plunger moves to a new "balancing" position S1. By varying the coil current, the plunger positioning can be controlled and moved "proportionally" to different positions by controlling the coil current. However, in actual applications, consideration has to be given to the influences of load variation, hysteresis and temperature.

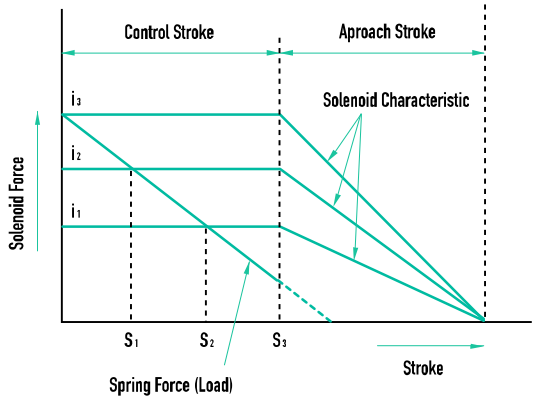

Fig. 2

B) Hysteresis

Hysteresis is represented as a ratio (%) of the rated output force when measured at the same position, as the plunger approaches that position from two directions. In an ideal world, there is no friction, and no residual magnetism, but in the real world these factors do exist and they do affect performance. As such the force when measured at the same position will be different when that position is approached from two directions. This force difference expressed as a percentage is called hysteresis. This can be seen in the following formula:

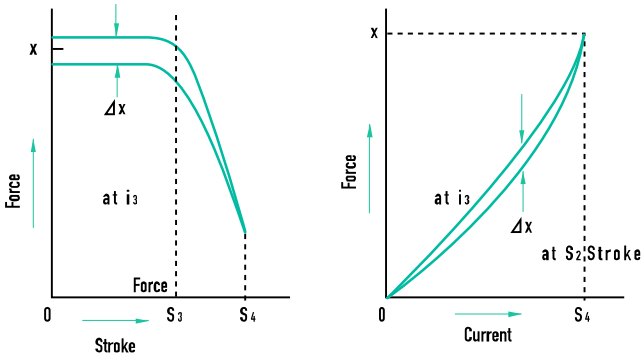

Fig. 3

Hysteresis (%) = X 100

2. Design and Features-On-Off Solenoids

On-Off solenoids are designed for use in directional control valves that require fast response time, high efficiency, solid mechanical structure and steady force characteristics, all in one package.

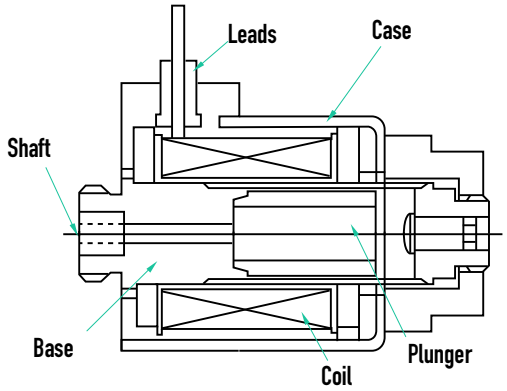

Fig. 4

3. Order Information

When placing an order for either proportional solenoids or on-off solenoids, please specify the type number shown in the rating table.

Example of a type number:
Proportional solenoid PS35SX-0203-24
On-Off solenoid SW4417CX-24

4. Labeling

For proportional solenoids and on-off solenoids, the part number labeling is as follows.

A) Standard Solenoid (no modification)

The solenoid label will have the part number and date code:

Example:

Proportional Solenoid PS35SX-0203-24 9801

Type Number
Date Code (year and week)

On-Off Solenoid SW4417CX-24 9801

Type Number
Date Code (year and week)

B) Special Configuration
(required for any modification to a standard design)

Any change from the standard catalog design requires that a custom part number be assigned, which will also include the date code of manufacture.

Example: F95015 9801

Special Part Number
Date Code (year and week)

[Size PS35SX-0203 proportional solenoid]

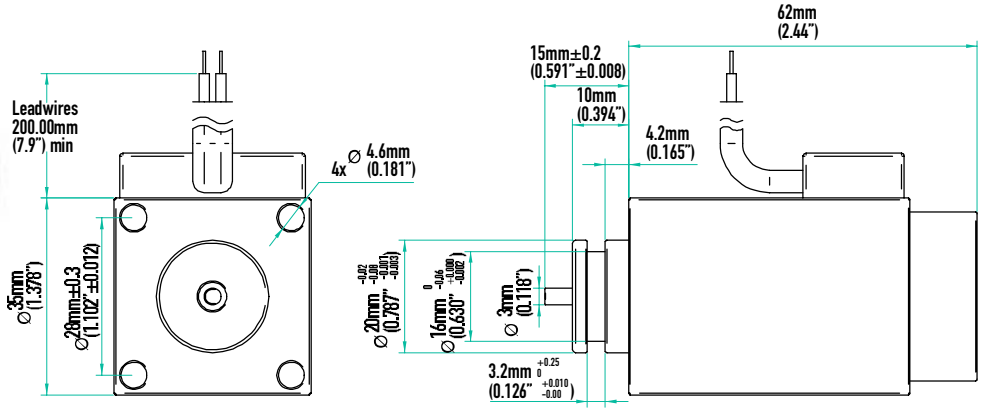

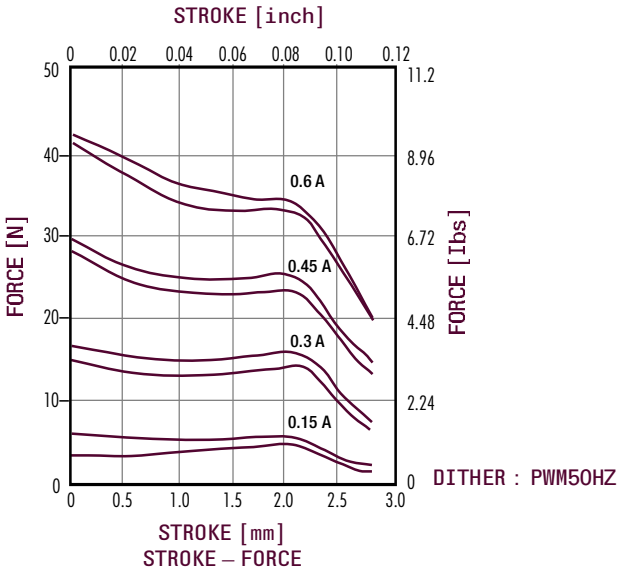

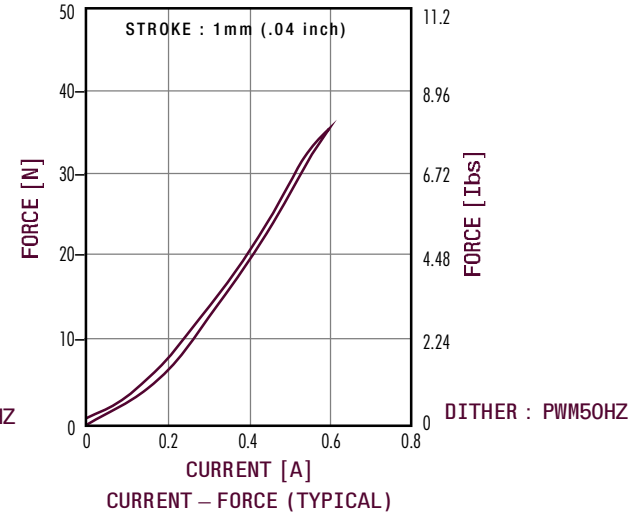

Item	Unit	Type No. PS35SX-0203-24
Volts DC	V	24
Current	A	Max 0.6
Resistance	Ω	22 at 20ºC
Watts	W	7.9 at 20ºC
Force	N//lbs	34.3//7.71 at 1mm (.04in), 0.6A
Control Stroke	mm (inch)	MAX. 2.0 (.078)
Full Stroke	mm (inch	MIN. 2.3 (.090)
Insulation Class		F(155%ºC)
Rated Pressure	MPa/PSI	0.35//50
Burst Pressure	MPa/PSI	1.03//150
Dielectric Strength		AC 1000V, 1 minute
Insulation Resistance		More than 100MΩ at DC 500V

[Size PS36CX-0102 proportional solenoid]

Unit : mm (inch)
SHOWN ENERGIZED

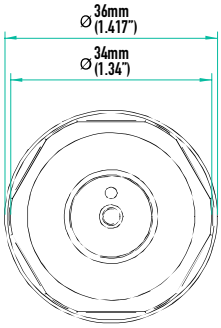

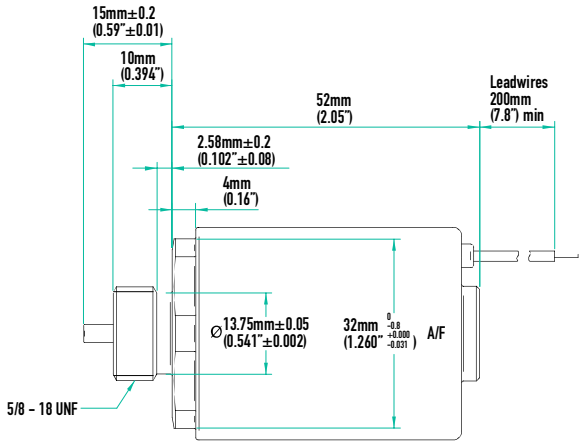

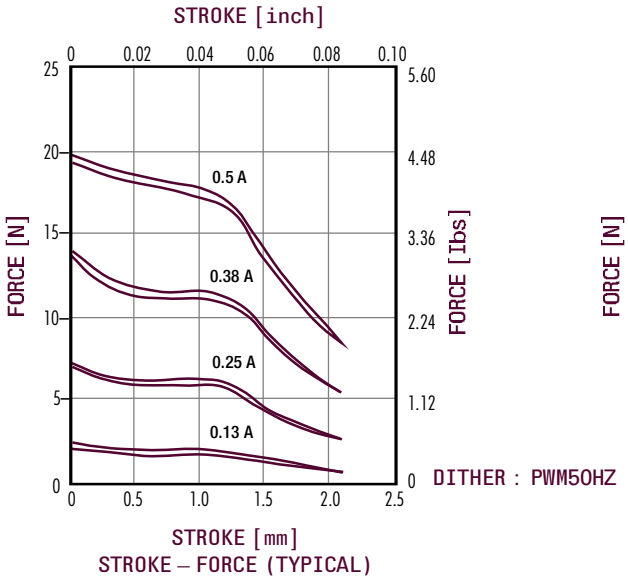

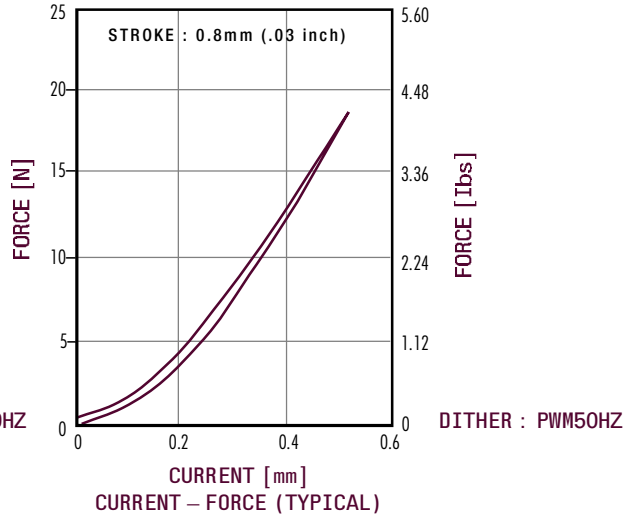

Item	Unit	Type No. PS36CX-0102-24
Volts DC	V	24
Current	A	Max 0.5
Resistance	ø	20 at 20ºC
Watts	W	5.0 at 20ºC
Force	N//lbs	17.7//3.97 at 0.8mm (.03in), 0.5A
Control Stroke	mm (inch)	MAX. 1.1 (0.43)
Full Stroke	mm (inch	Min. 1.6 (.062)
Insulation Class		F(155%ºC)
Rated Pressure	MPa//PSI	6.8//1000
Burst Pressure	MPa/PSI	20.6//3000
Dielectric Strength		AC 1000V, 1 minute
Insulation Resistance		More than 100Mø at DC 500V

[Size PS45CX-0202 proportional solenoid]

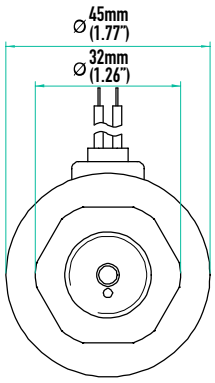

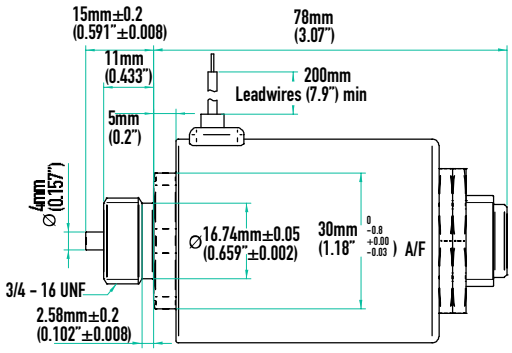

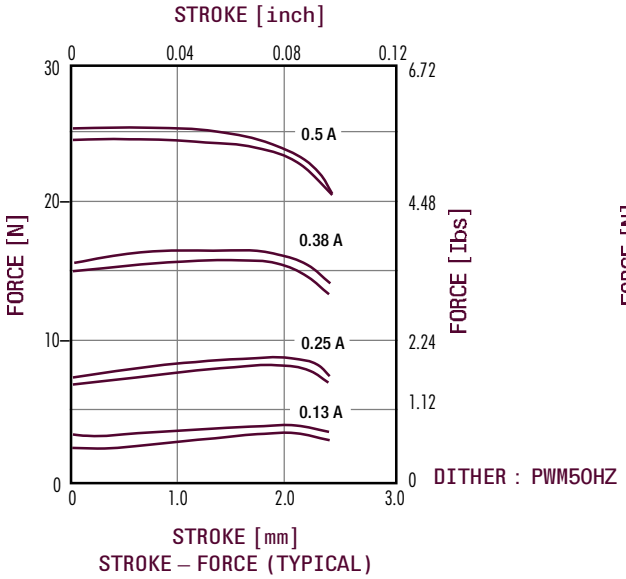

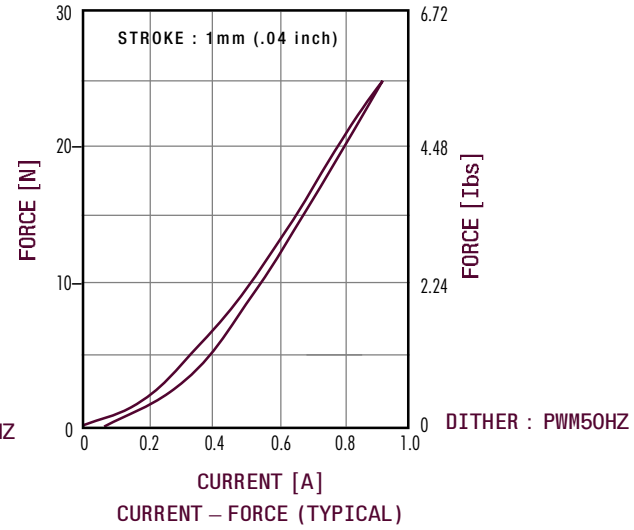

Item	Unit	Type No.PS45CX-0202-24
Volts DC	V	24
Current	A	Max 0.9
Resistance	ø	14 at 20ºC
Watts	W	11.3 at 20ºC
Force	N//lbs	24.5//5.5 at 1mm (.04in), 0.9A
Control Stroke	mm (inch)	MAX. 2.0 (.078)
Full Stroke	mm (inch	Min. 2.0 (.078)
Insulation Class		F(155%ºC)
Rated Pressure	MPa//PSI	3.5//500
Burst Pressure	MPa/PSI	10.3//1500
Dielectric Strength		AC 1000V, 1 minute
Insulation Resistance		More than 100Mø at DC 500V

[Size PS45SX-0305 proportional solenoid]

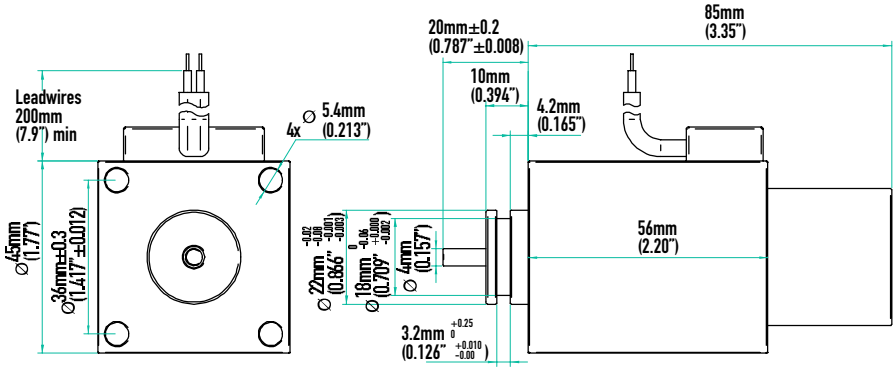

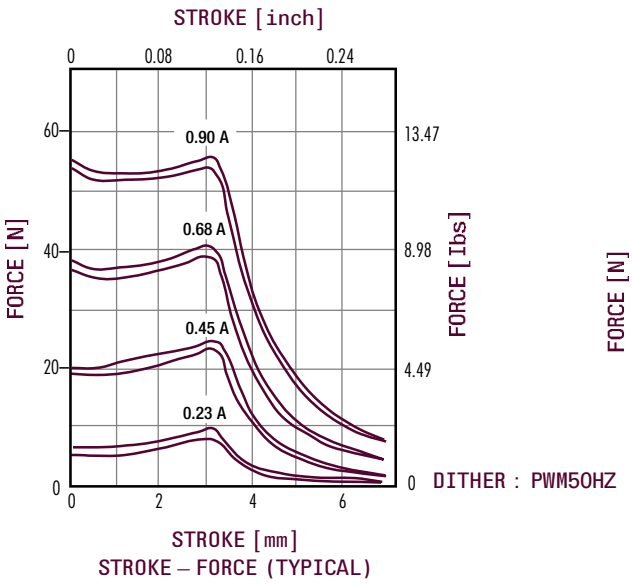

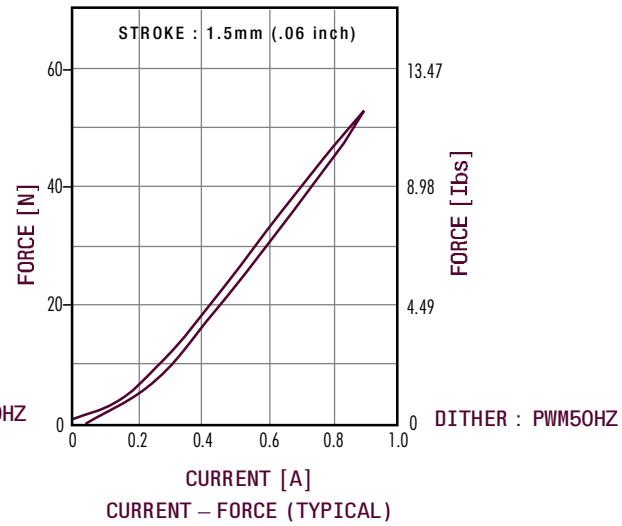

Item	Unit	Type No. PS45SX-0305-24
Volts DC	V	24
Current	A	Max 0.9
Resistance	ø	14.7 at 20ºC
Watts	W	11.8 at 20ºC
Force	N//lbs	51//11.44 at 1.5mm (.06in), 0.9A
Control Stroke	mm (inch)	MAX. 3.0 (.118)
Full Stroke	mm (inch	Min. 6.4 (.251)
Insulation Class		F(155%ºC)
Rated Pressure	MPa//PSI	6.8//1000
Burst Pressure	MPa/PSI	20.6//3000
Dielectric Strength		AC 1000V, 1 minute
Insulation Resistance		More than 100Mø at DC 500V

[Size PS48SX-0207 proportional solenoid]

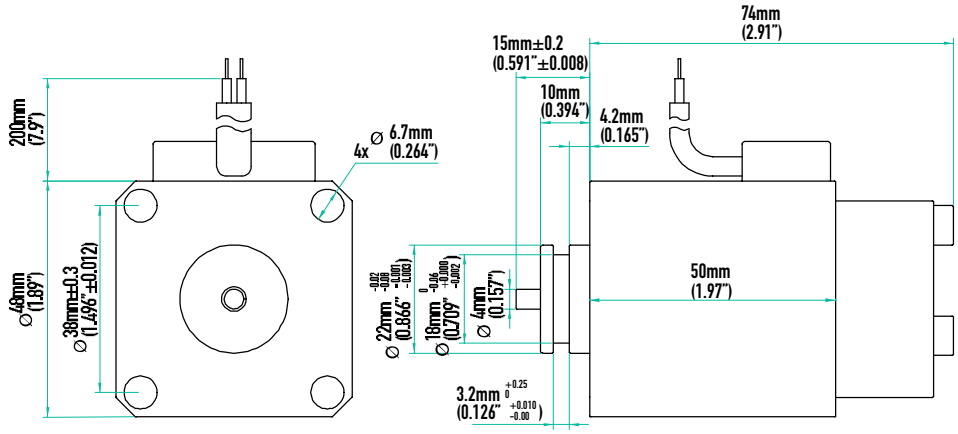

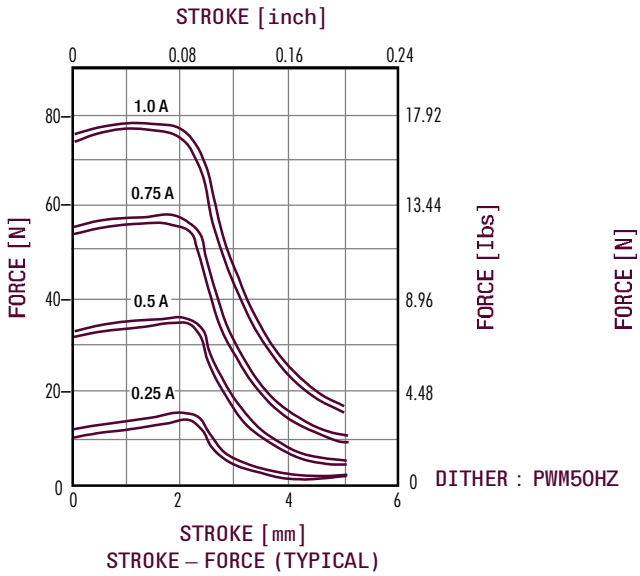

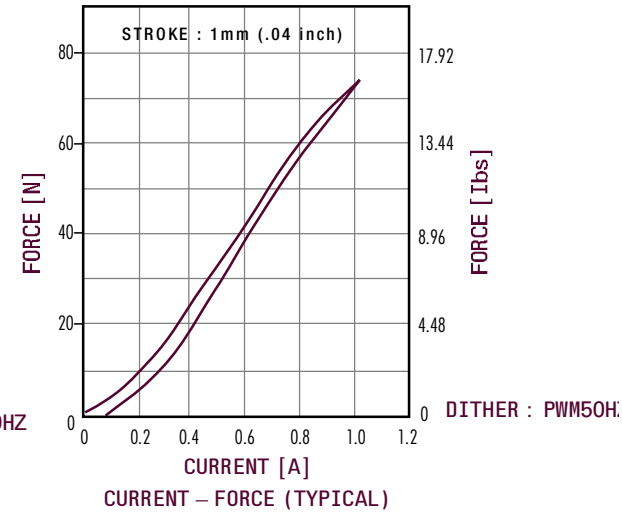

Item	Unit	Type No. PS48SX-0207-24
Volts DC	V	24
Current	A	Max 1.0
Resistance	ø	12.8 at 20ºC
Watts	W	12.8 at 20ºC
Force	N//lbs	74.5//16.72 at 1mm (.04in), 1.OA
Control Stroke	mm (inch)	MAX. 2.0// (.078)
Full Stroke	mm (inch	Min. 4.0// (.157)
Insulation Class		F(155%ºC)
Rated Pressure	MPa//PSI	1.03//150
Burst Pressure	MPa/PSI	3.09//450
Dielectric Strength		AC 1000V, 1 minute
Insulation Resistance		More than 100Mø at DC 500V

[Size PS50CX-0207 proportional solenoid]

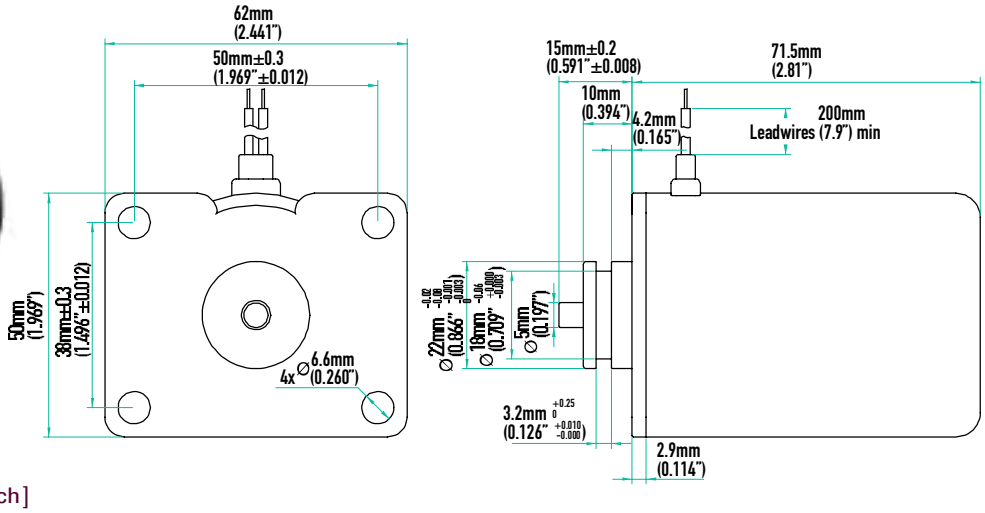

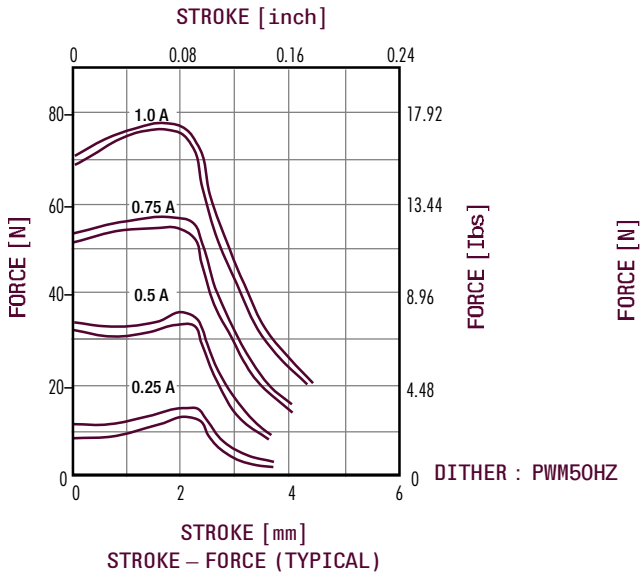

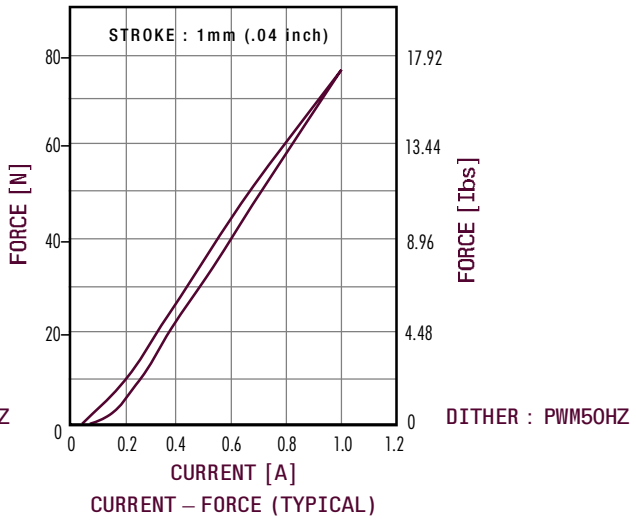

Item	Unit	Type No. PS48SX-0207-24
Volts DC	V	24
Current	A	Max 1.0
Resistance	ø	12.8 at 20ºC
Watts	W	12.8 at 20ºC
Force	N//lbs	72.5//16.28 at 1mm (.04in), 1.OA
Control Stroke	mm (inch)	MAX. 2.0// (.078)
Full Stroke	mm (inch	Min. 4.0// (.157)
Insulation Class		F(155%ºC)
Rated Pressure	MPa//PSI	1.03//150
Burst Pressure	MPa/PSI	3.09//450
Dielectric Strength		AC 1000V, 1 minute
Insulation Resistance		More than 100Mø at DC 500V

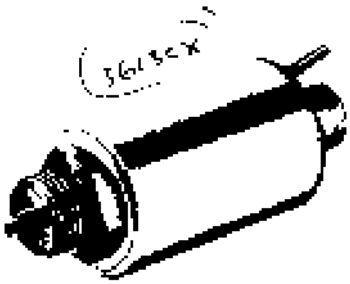

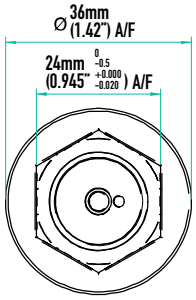

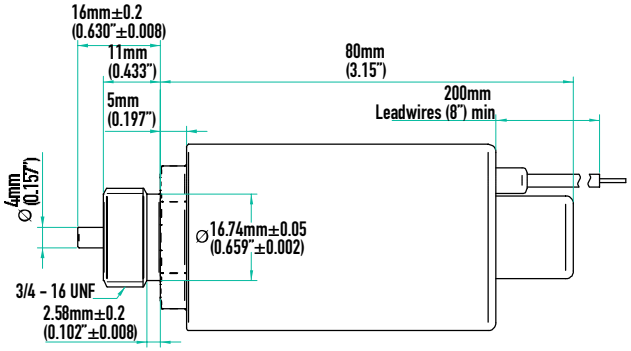

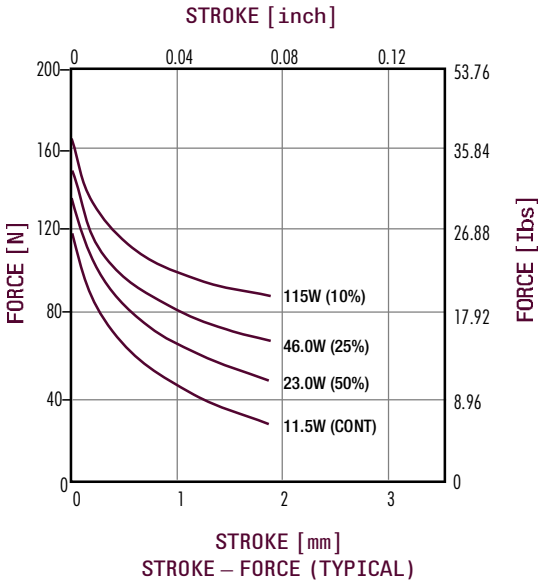

STROKE – FORCE (TYPICAL)

Item	Unit	Type No. SW3613CX-24
Volts DC	V	24
Current	A	0.48 at cont. DUTY CYCLE
Resistance	ø	50 at 20ºC
Watts	W	11.5 at 20ºC
Force	N//lbs	44.2//9.9 at 1mm/(0.04in) : cont
Fulll Stroke	mm (inch)	MIN. 1.5 (.59)
Insulation Class		F(155%ºC)
Rated Pressure	MPa//PSI	3.5//500
Burst Pressure	MPa/PSI	10.3//1500
Dielectric Strength		AC 1000V, 1 minute
Insulation Resistance		More than 100Mø at DC 500V

[Size SW4417CX wet type on-off solenoid]

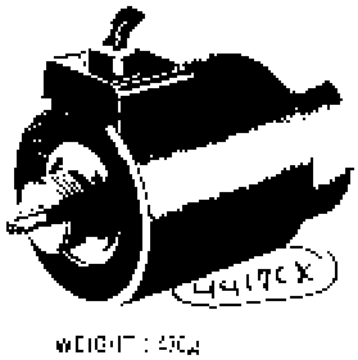

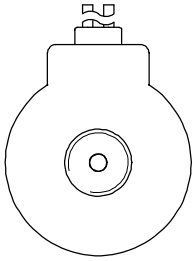

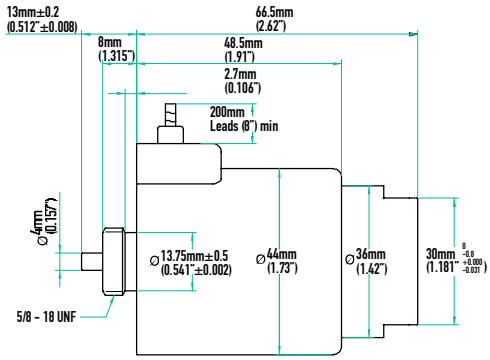

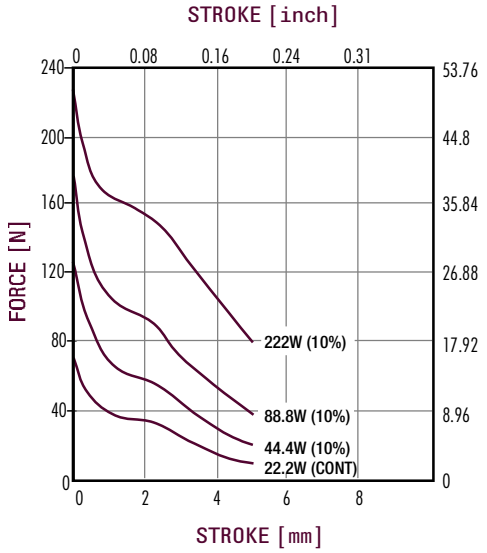

Item	Unit	Type No. SW4417CX-24
Volts DC	V	24
Current	A	0.92 at cont. DUTY CYCLE
Resistance	ø	26 at 20ºC
Watts	W	22.2 at 20ºC
Force	N//lbs	29.5//6.6 at 2mm/(0.08in) : cont
Fulll Stroke	mm (inch)	MIN. 4.5 (.177)
Insulation Class		F(155%ºC)
Rated Pressure	MPa//PSI	6.8//1000
Burst Pressure	MPa/PSI	20.6//3000
Dielectric Strength		AC 1000V, 1 minute
Insulation Resistance		More than 100Mø at DC 500V